SHEPHERD
MICRO RACING TEAM

VELOX 8.3

NAME	Tim Wood
DATE	December 2025
EVENT	WC
TRACK	Chile - CACH
AIR TEMP	
TRACTION	Medium
BEST LAP	14.6

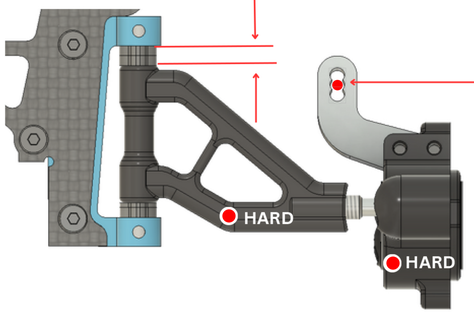

CASTER 5.0 mm

UPRIGHT INSERTS: CENTRIC ○ EXCENTRIC ✔

BUMP STEER 0.0 mm

FRONT ONEWAY POSITION

	HIGH		
BELT	210mm ✔	210mm	207mm
FRONT — REAR			
BELT	210mm	210mm	207mm
		LOW	

ACTIVE ○ SHIM ___ mm

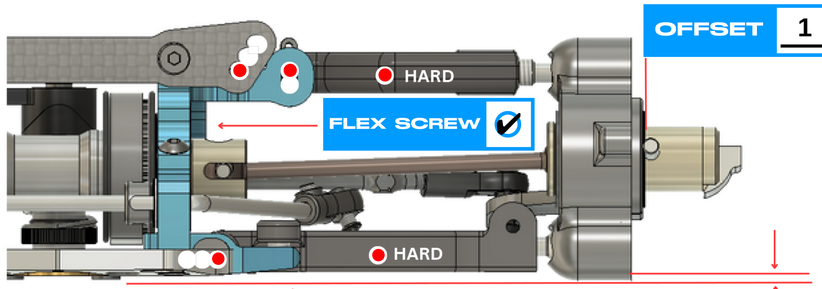

OFFSET 1.0 mm

FLEX SCREW ✔

RIDE HEIGHT 8.0 mm

DOWNSTOP 0.5 mm

WHEELBASE: LONG ✔ SHORT ○

TOE IN/OUT -1.0°

CAMBER LEFT 2.1°

WIDTH 250.0 mm

CAMBER RIGHT 1.9°

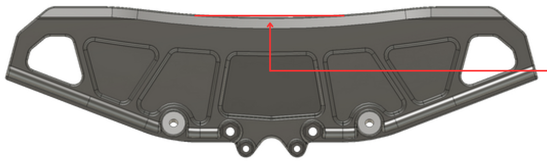

BODY: Blitz Spider

DISTANCE TO BUMPER: Std mm

AWS BATTERY TRAY ○

CARBON ○ BRASS ○ | CARBON ○ BRASS ○ | CARBON ✔ BRASS ○

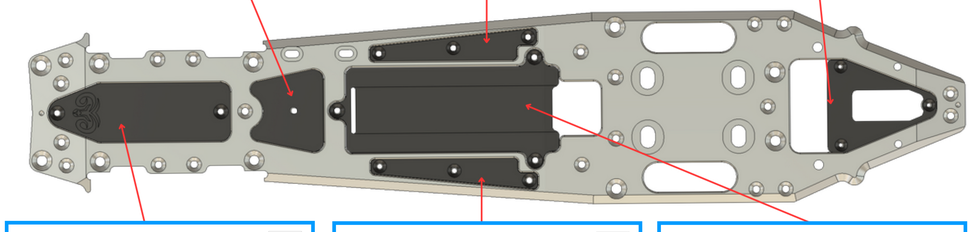

CARBON ✔ BRASS ○ | CARBON ○ BRASS ○ | CARBON ○ BRASS ✔

FRONT / REAR

FRONT LEFT	FRONT RIGHT	TYRES	REAR LEFT	REAR RIGHT
Matrix	Controlled	BRAND	Matrix	Controlled
32	32	SHORE	35	35
69	69	DIAMETER	76	76
		ADDITIVE		

SHOCKS

White/Blue	SPRINGS	6.1
650	OIL	700
1.2mm	PISTON	1.0mm + 1.2mm
1	HOLE	2
Kit	FP SPRING	Kit

ANTI-ROLL BAR

FRONT 2.2 mm REAR 3.0 mm

FRONT AXLE

SOLID ○ SPLIT ● 90 DEG ○ STR ○

CLUTCH

TYPE	Shepherd Reverse
SHOE	Yellow
PRELOAD	3/4 Turn out
GAP	0.6mm

GEAR RATIO

1ST 19 / 62 2ND 24 / 57

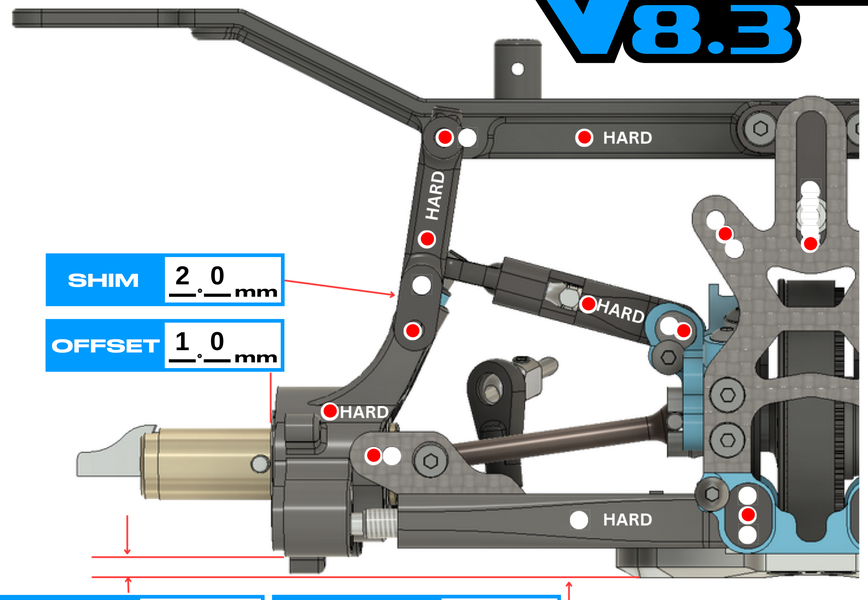

SHIM 2.0 mm

OFFSET 1.0 mm

DOWNSTOP 7.5 mm

RIDE HEIGHT 9.5 mm

CAMBER LEFT 3.2°

TOE IN/OUT 2.8°

CAMBER RIGHT 3.2°

WIDTH 259.5 mm

LONG ✔ MEDIUM ○ SHORT ○

8mm ○ 9mm ● 10mm ○

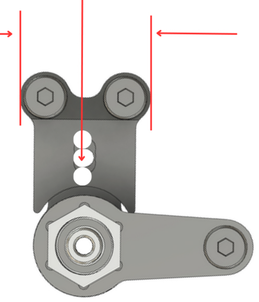

UPRIGHT INSERTS: F ○ R ●

AERO DISCS: F ○ R ✔

ENGINE	Hasi AAC - Nuovo	PIPE	OS 2196		
MANIFOLD	MR04	GLOWPLUG	RP7	FUEL	Energy25

NOTES

Shepherd Carbon Ackerman Plate 9mm - SH907314
0.25mm Shim under ackerman plate
Shepherd 35g Chassis weights under radioplate bracket - SH903104
Side Braces Disconnected
Shepherd Low Friction Belts & Pulleys - SH900024 + SH900020
Shepherd Blue Quick Change Levers - SH900049
Brilliant RC Aluminium Pivot Balls - BR1008 + BR1009
Brilliant RC TI Hinge Pins & Screw Set - BR600001T + BR700004B
Brilliant RC Hole Reinforcements & Fuel Filter - BR2005 + BR1010
Brilliant RC Chassis Weight - BR7000
Safetycarmodel - Proto Clutch Spring